DRILL PATTERNS CRAFTSMAN MARINE INSTRUMENT PANELS ALFA SERIES

SCALE : 1:1

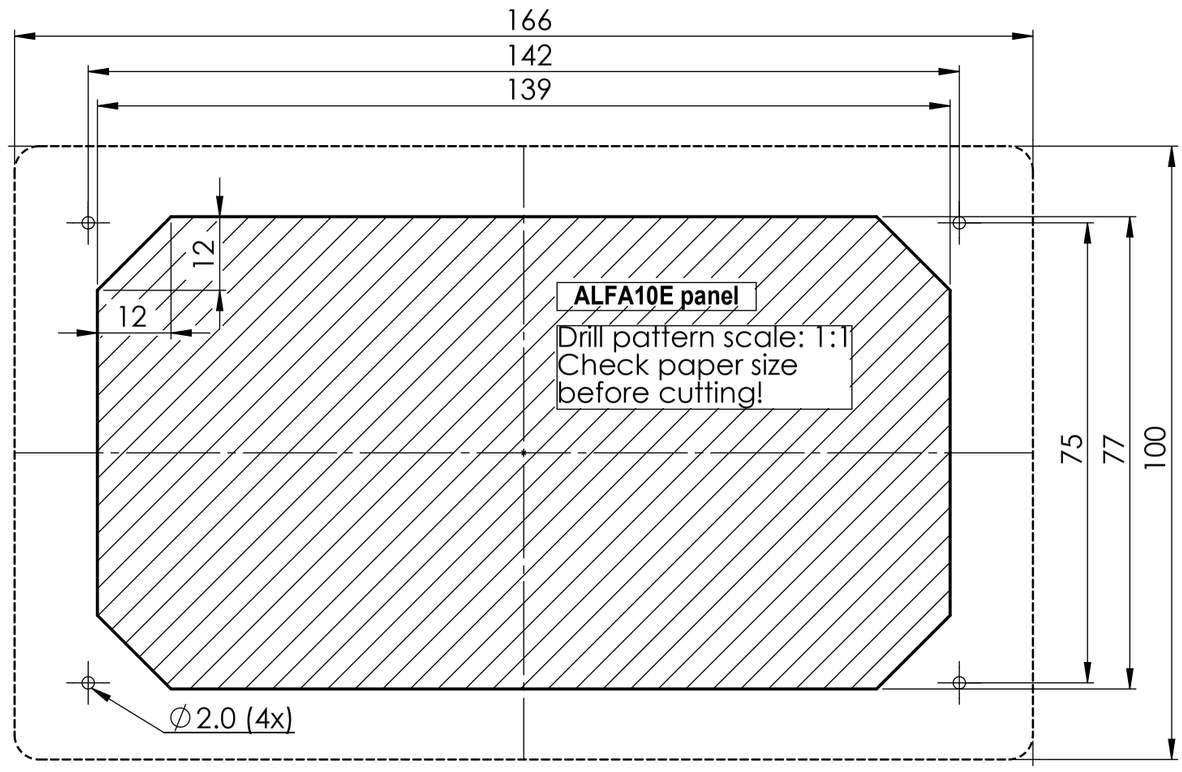

DRILL PATTERNS CRAFTSMAN MARINE INSTRUMENT PANELS ALFA SERIES

SCALE : 1:1

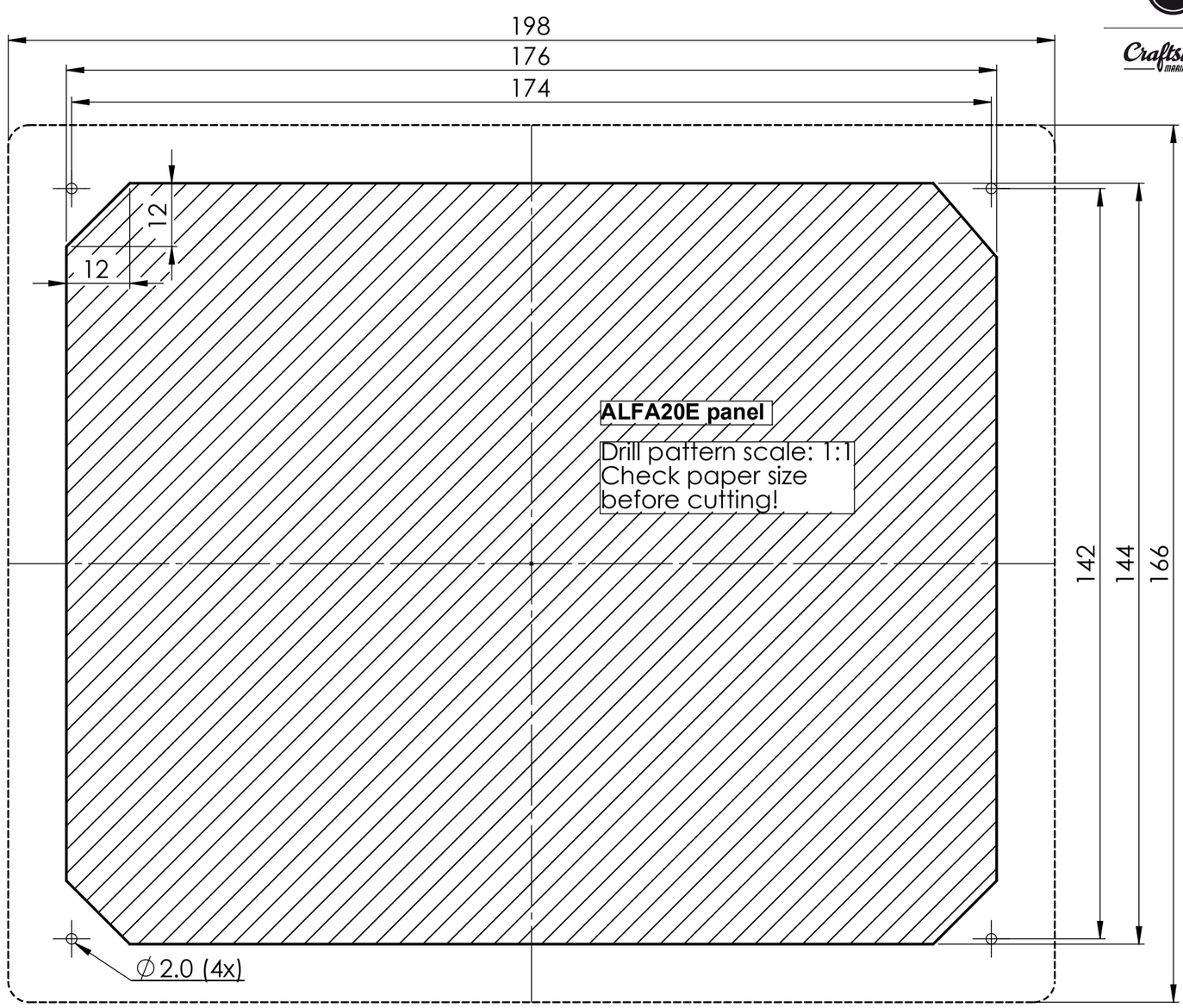

DRILL PATTERNS CRAFTSMAN MARINE INSTRUMENT PANELS ALFA SERIES

SCALE : 1:1

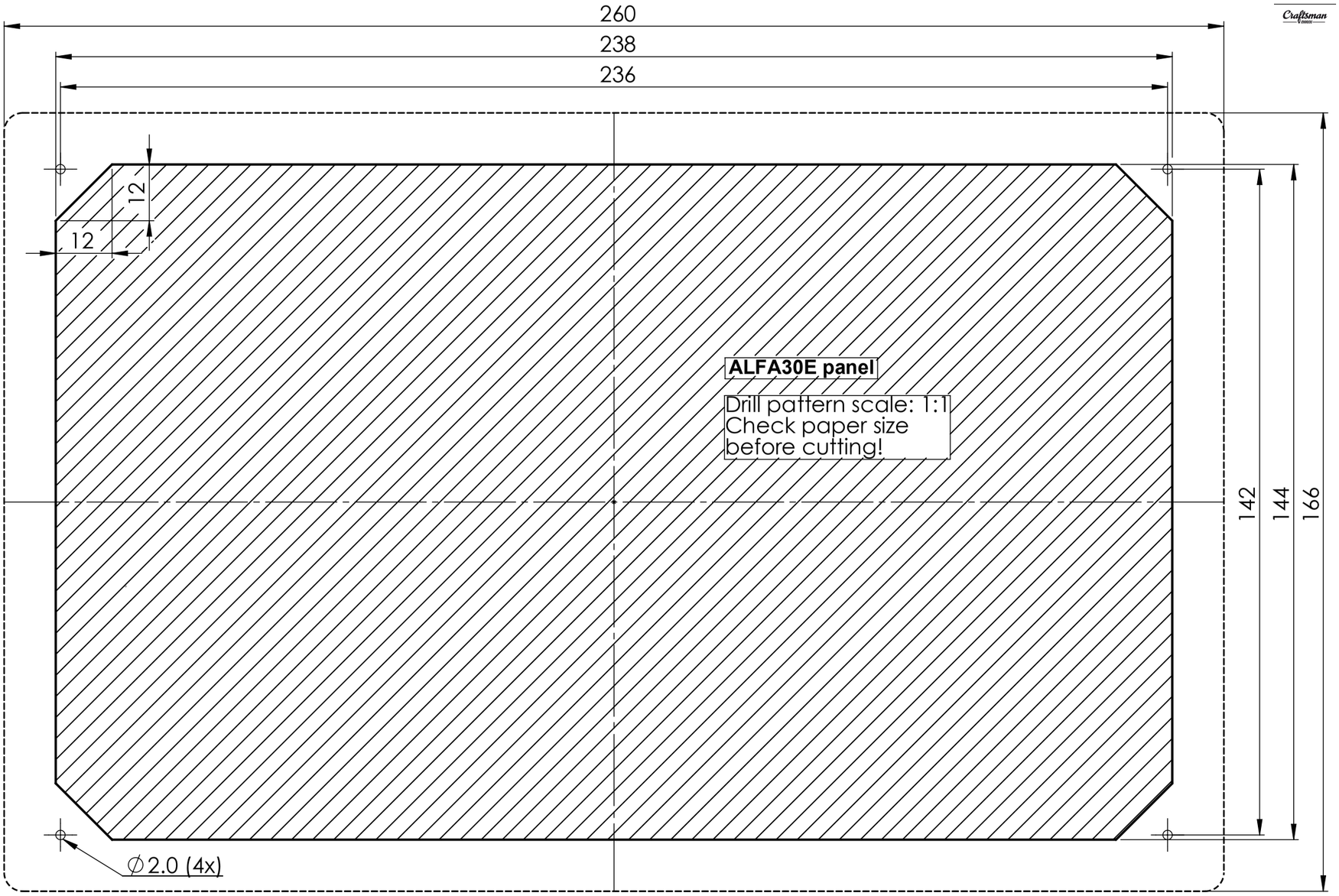

DRILL PATTERNS CRAFTSMAN MARINE INSTRUMENT PANELS ALFA SERIES
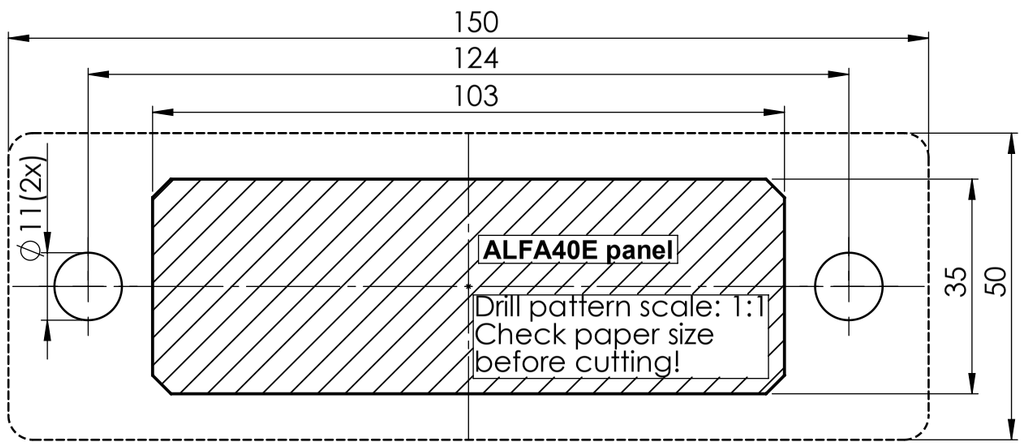
SCALE : 1:1